ERATECH

Manufacturing Sdn. Bhd-1006233(T)

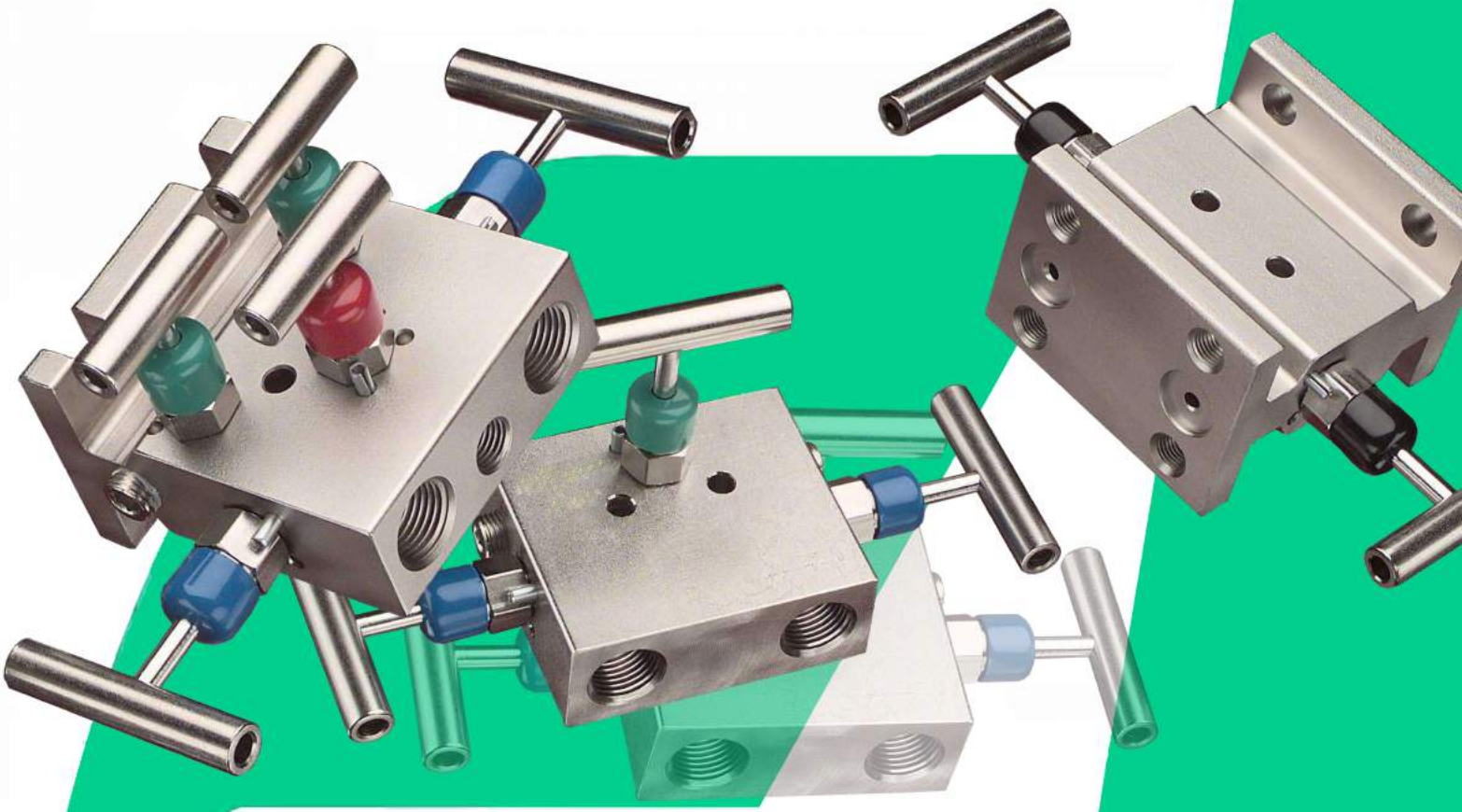

GENERAL CATALOG

Manifold Valves

- ✔ *Quality is Respected*
- ✔ *ATEX Certified*
- ✔ *ISO 9001-2008*

Needle, Gauge and Manifold Valves

Accurate flow measurement is of primary importance in achieving an efficient process system. Eratech offers a complete line of needle, gauge and instrument manifold valves designed to provide accurate, safe and dependable flow measurement. The design of these valves reflects extensive engineering and manufacturing experience, resulting in attainment of the highest standards for valve quality and reliability.

Our needle, gauge and instrument manifold valves have been engineered to provide versatility in meeting specific process requirements. Most valves are rated for pressure service to 6,000 psi (414 bar). Valves with ratings of up to 60,000 psi can be manufactured upon request.

Features:

- One piece bar stock construction with full material traceability.
- Back seating of stems in a fully open position prevents stem backout.
- Locking of valve bonnet prevents accidental removal while operating valve.
- Stem seal isolates the lubricated stem threads from the process.

property of Eratech SDN BHD, All right reserved, Website: www.Eratech.com.my

• Stainless steel models of needle, gauge and instrument manifold valves, equipped with needle stems, are available conforming to NACE MR-0175.

• All valves are designed in accordance with ASME Section VIII, Div. 1.

Needle Valves

Eratech needle valves are engineered to provide a reliable method for isolating instrumentation from the process and for throttling or shut-off requirements. The valves are bubble tight in both the seated and back seated positions. Both hard and soft seated models are available. These needle valves will accept a variety of pipe sizes in 1/4" and 1/2" and are rated for either 3000 (soft seat) or 6000 psi. Other sizes and ratings can be manufactured upon request.

Gauge Valves

Gauge valves are primarily used to isolate the process from instrumentation such as gauges or transmitters. Our valves can be manufactured with an extended length between the inlet and the bonnet centerline to ensure the valve extends far enough from the process connection to clear the pipeline insulation or to distance a socket weld end from the bonnet. Eratech gauge valves accept a variety of bonnet styles, threaded pipe sizes and socket welds and are rated for service to 6,000 psi (414 bar).

property of Eratech SDN BHD, All right reserved, Website: www.Eratech.com.my

Instrument Manifold Valves

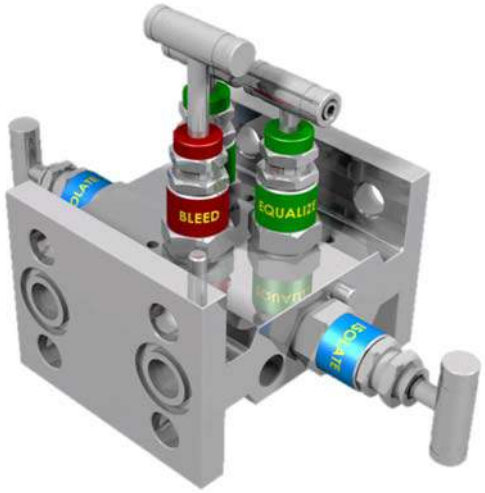

Eratech instrument manifold valves provide a safe, economical and convenient method of isolating, blocking, bleeding and calibrating instruments, meters and pressure transmitters. These valves are available with NPT or instrument flange connections.

Eratech instrument manifold valves operate to pressures of 6,000 psi (414 bar) and offer excellent flexibility with different body patterns and hard seat models utilizing a non-rotating tip. Valve models include 2, 3 and 5 valve remote line mounting; 2, 3 and 5 valve direct mounting single flange; and 2, 3 and 5 valve direct mounting, dual flange.

Customer Support

Eratech is prepared to assist you in every phase of the design/application cycle. Our technical sales specialists will work with your design team to ensure the correct valve configuration is selected, and/or to custom engineer a special valve for your individual requirements.

Our technical team is available to conduct any on-site review/analysis of your application requirements or to provide timely installation and repair services. Whatever your need, Eratech's experience and customer oriented focus will help you find a solution.

property of Eratech SDN BHD, All right reserved, Website: www.Eratech.com.my

INDEX

V1 SERIES V-8

V1B SERIES V-9

V2I SERIES V-10

V2T SERIES V-11

V2H SERIES V-12

V2B SERIES V-13

V3I SERIES V-14

V3T SERIES V-15

V3H SERIES V-16

property of Eratech SDN BHD, All right reserved, Website: www.Eratech.com.my

V3B SERIES V-17

V5I SERIES V-18

V5T SERIES V-20

V5H SERIES V-21

V5B SERIES V-22

property of Eratech SDN BHD, All right reserved, Website: www.Eratech.com.my

Valve Bonnet Assembly

- Caps are color coded to identify the functions of valves.

  Blue: isolate Green: equalize Red: bleed
- PTFE packing can be adjusted by the packing adjuster to extend the valve's life.
- Sealing area below the threads protects the process from contamination by thread lubricant and prevents lubricant washout.
- Maximum temperature (PTFE packing): 230°C
- Maximum temperature (Graphite packing): 350°C
- The valves feature safety back seating to ensure a secondary stem seal.
- Non-Rotating tip provides a galling-resistant seal.
- The stem threads are lubricated to prevent galling and reduce operating torque.
- Dust caps are fitted to contain stem lubricant and prevent the ingress of contaminants.
- Bonnet lock pin prevents accidental removal while in service.
- 100% factory tested.

Allowable Pressure vs. Temperature (for standard types and ratings)

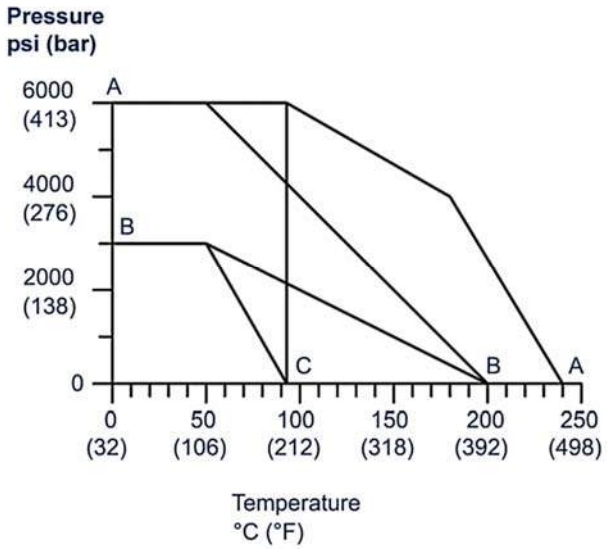

property of Eratech SDN BHD, All right reserved, Website: www.Eratech.com.my

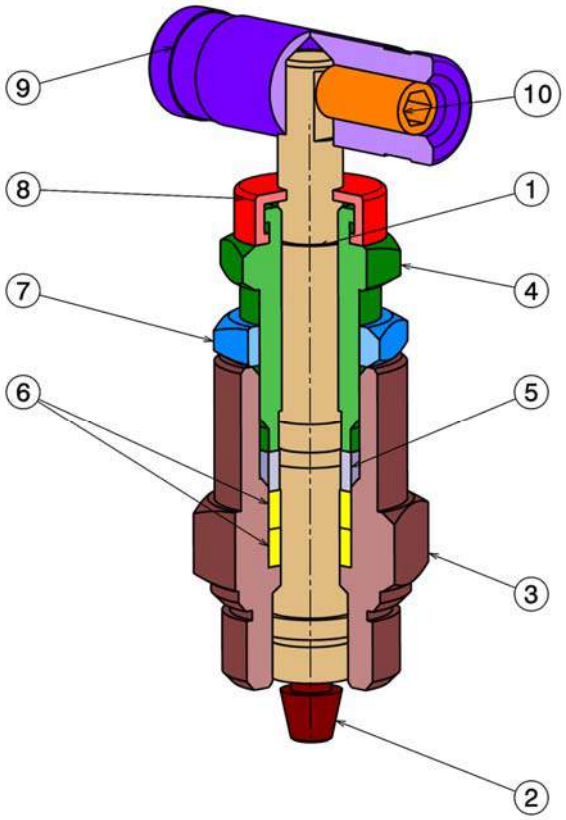

No.	Description	Material	Qty.
1	Stem	SS316	1
2	Non-Rotating tip	Duplex SS	1
3	Bonnet	SS304	1
4	Packing Adjuster	SS316	1
5	Thrust Bush	SS316	1
6	Packing	PTFE	2
7	Gland Adjuster Lock Nut	SS304	1
8	Dust Cap	NBR	1
9	Handle	SS304	1
10	Handle lock screw	SS304	1

property of Eratech SDN BHD, All right reserved, Website: www.Eratech.com.my

V1 SERIES

Isolating Valve
6000 psi

Part No.	Connections	
	INLET	OUTLET
ETV-V1	½” NPT Female	½” NPT Female
ETV-V1	¼” NPT Female	¼” NPT Male
ETV-V1	½” NPT Male	½” NPT Female
ETV-V1	¼” NPT Male	¼” NPT Female

Notes:
- Custom sizes, ratings and materials are available upon request.
- For NACE conformity of SS316 material, add “-NACE” to the end of part number.

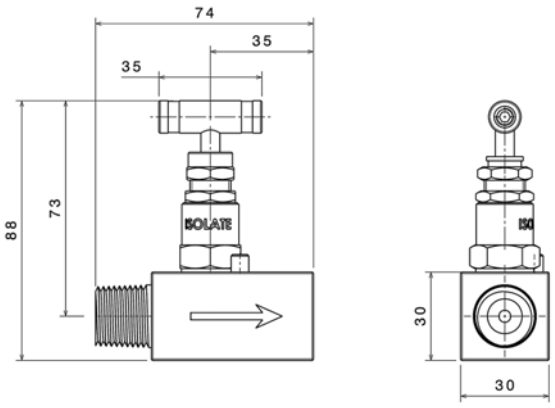

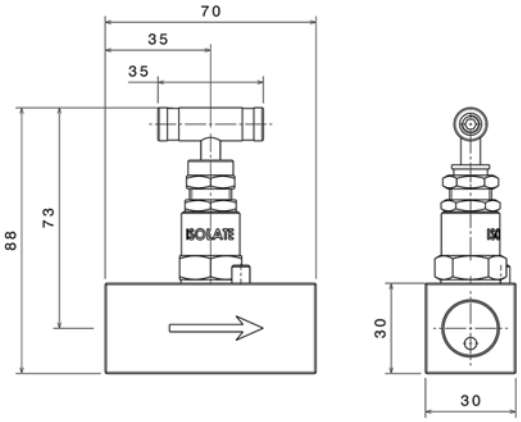

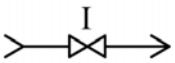

property of Eratech SDN BHD, All right reserved, Website: www.Eratech.com.my

V1B SERIES

Isolating Valve with Bleed Port 6000 psi

Part No.	Connections	
	INLET	OUTLET
ETV-V1B	½" NPT Female	½" NPT Female
ETV-V1B	¼" NPT Female	½" NPT Female
ETV-V1B	¼" NPT Male	¼" NPT Female
ETV-V1B	¼" NPT Male	¼" NPT Female

Notes:
- Custom sizes, ratings and materials are available upon request.
- For NACE conformity of SS316 material, add "-NACE" to the end of part number.

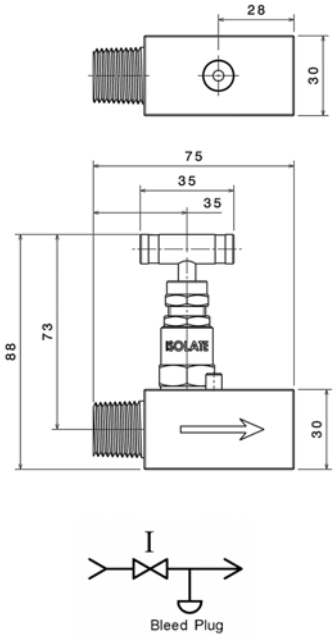

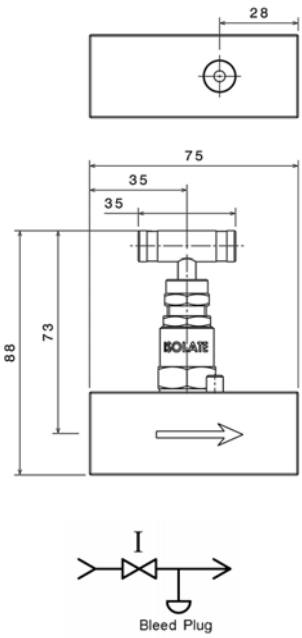

property of Eratech SDN BHD, All right reserved, Website: www.Eratech.com.my

V2I SERIES

Block and Bleed Valve – I type 6000 psi

Part No.	Connections	
	INLET	OUTLET
ETV-V2I	½" NPT Male	½" NPT Female
ETV-V2I	½" NPT Female	½" NPT Female

Notes:
- Custom sizes, ratings and materials are available upon request.
- For NACE conformity of SS316 material, add "-NACE" to the end of part number.

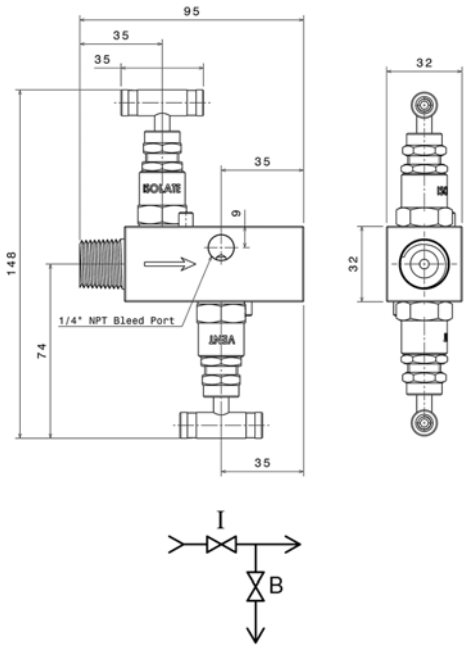

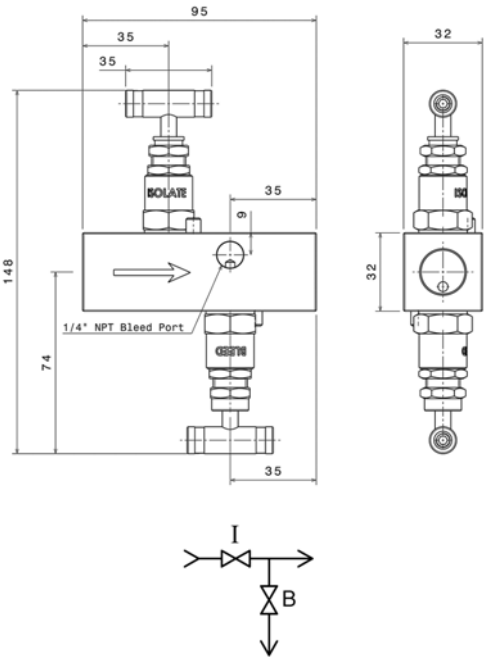

property of Eratech SDN BHD, All right reserved, Website: www.Eratech.com.my

V2T SERIES

Block and Bleed Valve – T type 6000 psi

Part No.	Connections	
	INLET	OUTLET
ETV-V2T	½" NPT Male	Flanged

Notes:
- Custom sizes, ratings and materials are available upon request.
- For NACE conformity of SS316 material, add "-NACE" to the end of part number.
- Flanged according IEC61518/B (type A on request)

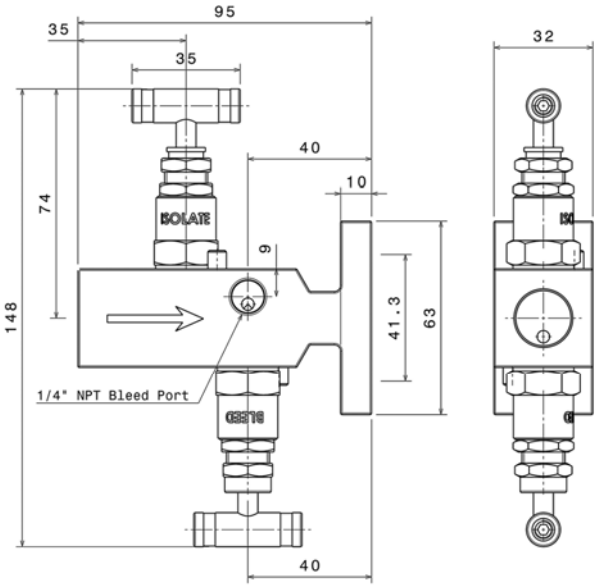

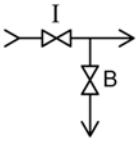

property of Eratech SDN BHD, All right reserved, Website: www.Eratech.com.my

V2H SERIES

Block and Bleed Valve – H type 6000 psi

Part No.	Connections	
	INLET	OUTLET
ETV-V2H	Flanged	Flanged

Notes:
- Custom sizes, ratings and materials are available upon request.
- For NACE conformity of SS316 material, add "-NACE" to the end of part number.
- Flanged according IEC61518/B (type A on request)

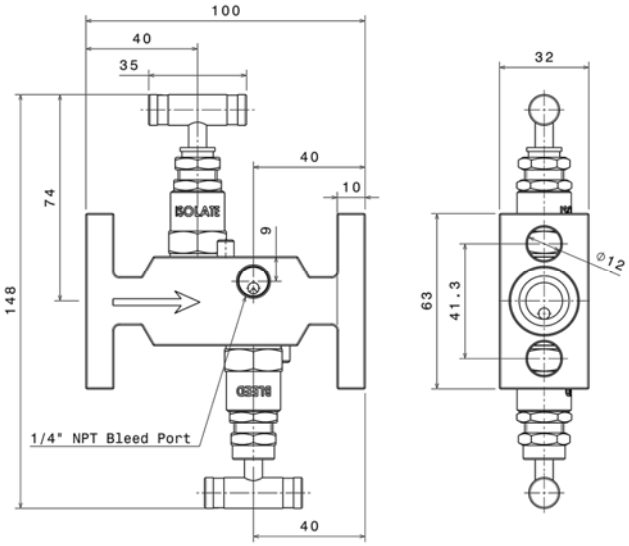

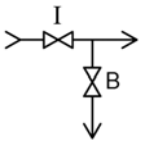

property of Eratech SDN BHD, All right reserved, Website: www.Eratech.com.my

V2B SERIES

Block and Bleed Valve – B type 6000 psi

Part No.	Connections	
	INLET	OUTLET
ETV-V2B	½" NPT Female	½" NPT Female

Notes:
- Custom sizes, ratings and materials are available upon request.
- For NACE conformity of SS316 material, add "-NACE" to the end of part number.

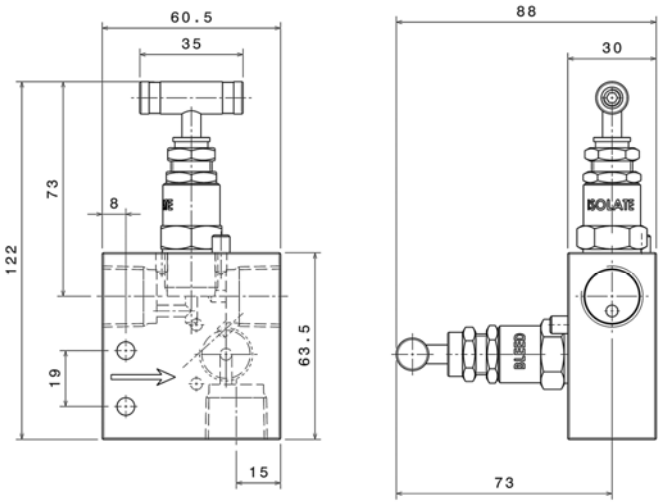

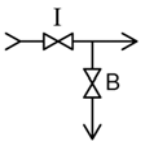

property of Eratech SDN BHD, All right reserved, Website: www.Eratech.com.my

V3I SERIES

3 Valve Manifold – I type
6000 psi

Part No.	Connections	
	INLET	OUTLET
ETV-V3I	2 x ½" NPT Female	2 x ½" NPT Female

Notes:
- Custom sizes, ratings and materials are available upon request.
- For NACE conformity of SS316 material, add "-NACE" to the end of part number.

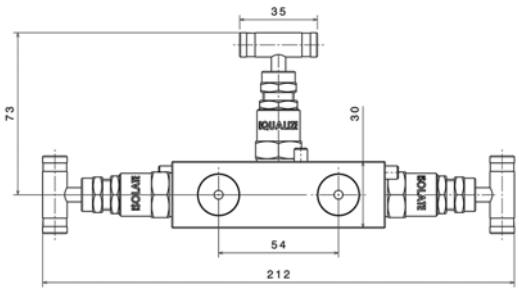

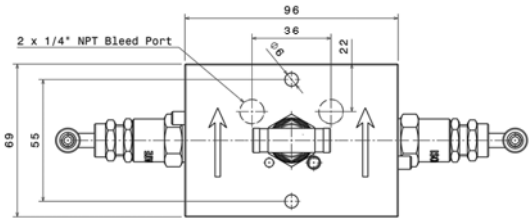

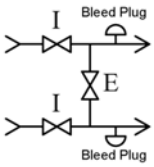

property of Eratech SDN BHD, All right reserved, Website: www.Eratech.com.my

V3T SERIES

3 Valve Manifold – T type
6000 psi

Part No.	Connections	
	INLET	OUTLET
ETV-V3T	2 x ½" NPT Female	2 x Flanged

Notes:
- Custom sizes, ratings and materials are available upon request.
- For NACE conformity of SS316 material, add "-NACE" to the end of part number.
- Flanged according IEC61518/B (type A on request)

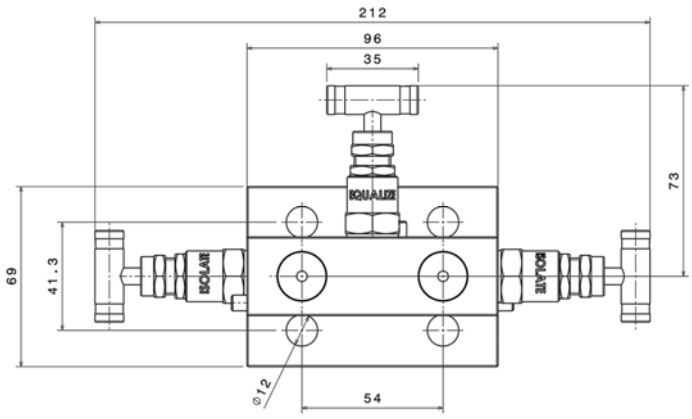

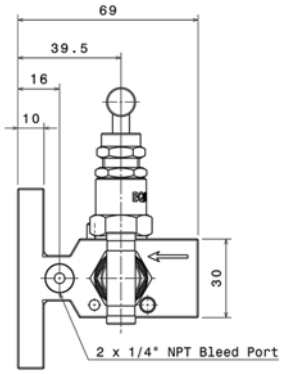

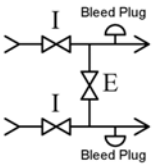

property of Eratech SDN BHD, All right reserved, Website: www.Eratech.com.my

V3H SERIES

3 Valve Manifold – H type
6000 psi

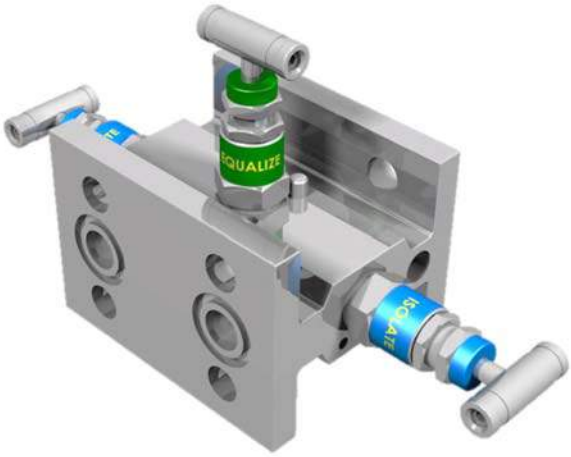

Part No.	Connections	
	INLET	OUTLET
ETV-V3H	2 x Flanged	2 x Flanged

Notes:
- Custom sizes, ratings and materials are available upon request.
- For NACE conformity of SS316 material, add "-NACE" to the end of part number.
- Flanged according IEC61518/B (type A on request)

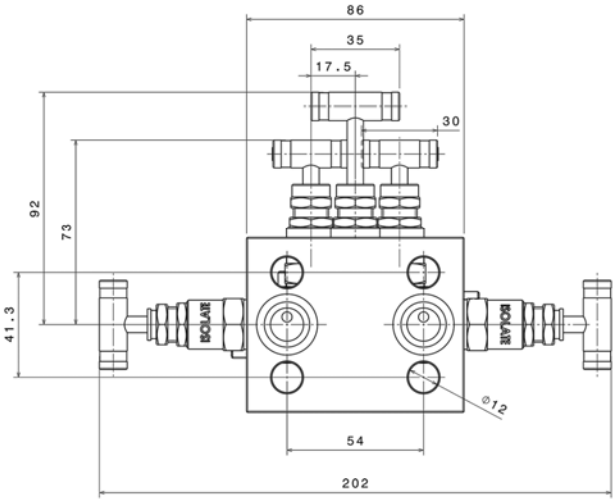

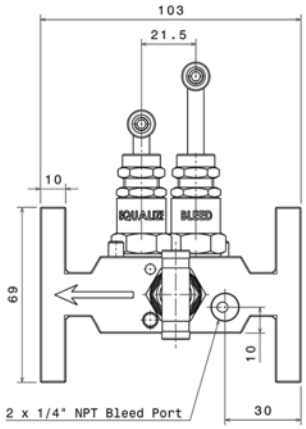

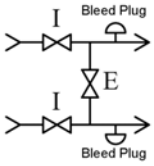

property of Eratech SDN BHD, All right reserved, Website: www.Eratech.com.my

V3B SERIES

3 Valve Manifold – B type
6000 psi

Part No.	Connections	
	INLET	OUTLET
ETV-V3B	2 x ½" NPT Female	2 x Flanged

Notes:
- Custom sizes, ratings and materials are available upon request.
- For NACE conformity of SS316 material, add "-NACE" to the end of part number.
- Flanged according IEC61518/B (type A on request)

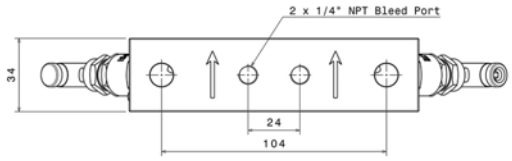

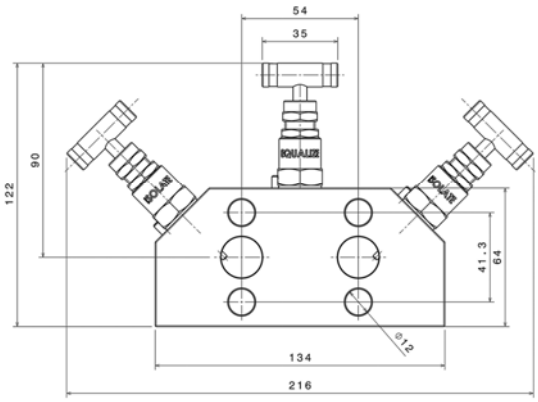

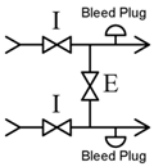

property of Eratech SDN BHD, All right reserved, Website: www.Eratech.com.my

V5I SERIES

5 Valve Manifold – I type – T1
6000 psi

Part No.	Connections	
	INLET	OUTLET
ETV-V5IT1	2 x ½" NPT Female	2 x ½" NPT Female

Notes:
- Custom sizes, ratings and materials are available upon request.
- For NACE conformity of SS316 material, add "-NACE" to the end of part number.

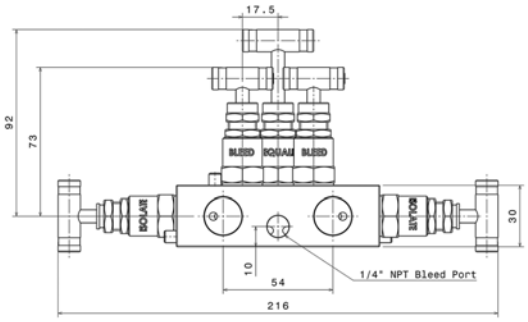

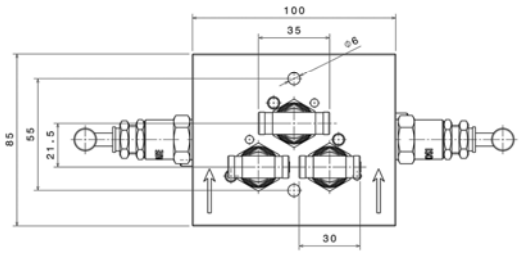

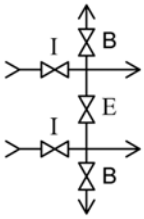

property of Eratech SDN BHD, All right reserved, Website: www.Eratech.com.my

V5I SERIES

5 Valve Manifold – I type – T2
6000 psi

Part No.	Connections	
	INLET	OUTLET
ETV-V5IT2	2 x ½" NPT Female	2 x ½" NPT Female

Notes:
- Custom sizes, ratings and materials are available upon request.
- For NACE conformity of SS316 material, add "-NACE" to the end of part number.

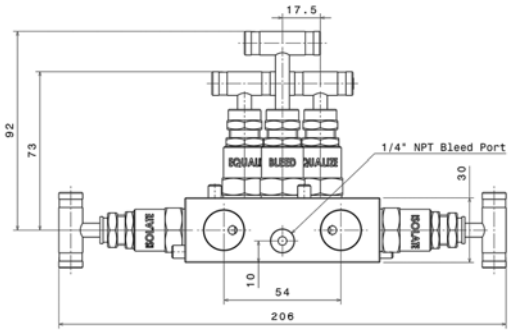

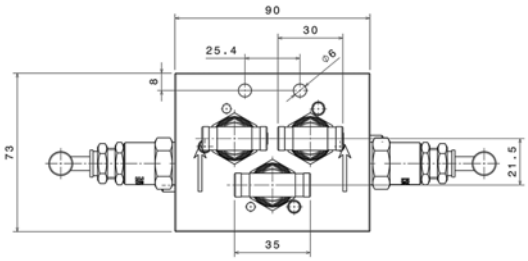

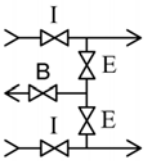

Option 1

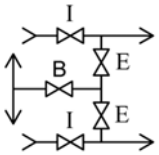

Option 2

property of Eratech SDN BHD, All right reserved, Website: www.Eratech.com.my

V5T SERIES

5 Valve Manifold – T type
6000 psi

Part No.	Connections	
	INLET	OUTLET
ETV-V5T	2 x ½" NPT Female	2 x Flanged

Notes:
- Custom sizes, ratings and materials are available upon request.
- For NACE conformity of SS316 material, add "-NACE" to the end of part number.
- Flanged according IEC61518/B (type A on request)

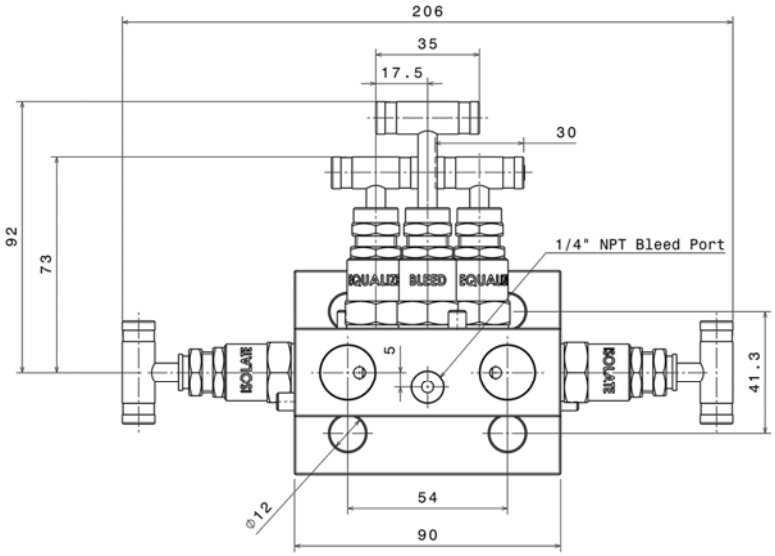

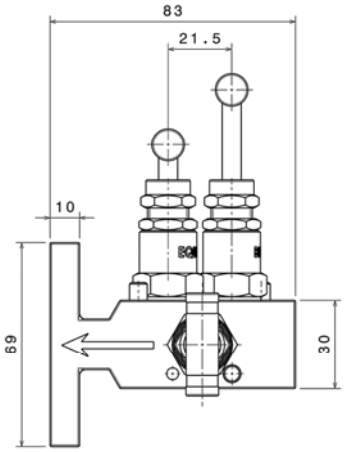

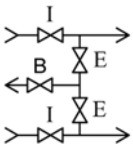

property of Eratech SDN BHD, All right reserved, Website: www.Eratech.com.my

V5H SERIES

5 Valve Manifold – H type
6000 psi

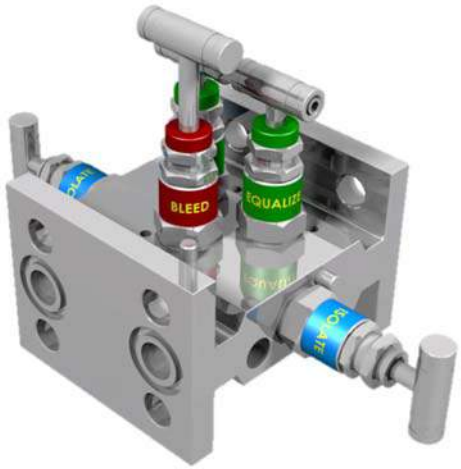

Part No.	Connections	
	INLET	OUTLET
ETV-V5H	2 x Flanged	2 x Flanged

Notes:
- Custom sizes, ratings and materials are available upon request.
- For NACE conformity of SS316 material, add "-NACE" to the end of part number.
- Flanged according IEC61518/B (type A on request)

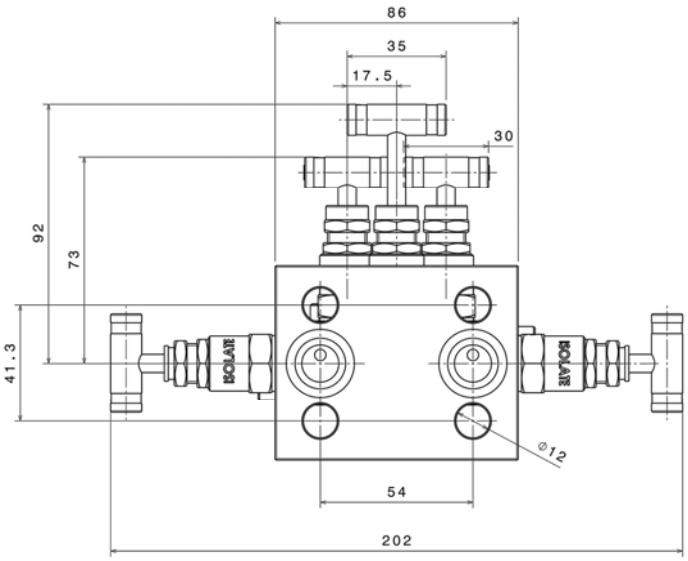

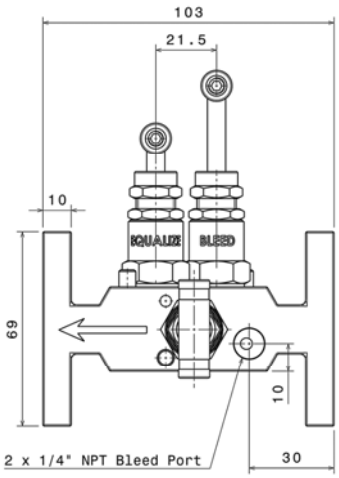

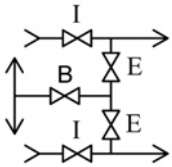

property of Eratech SDN BHD, All right reserved, Website: www.Eratech.com.my

V5B SERIES

5 Valve Manifold – B type
6000 psi

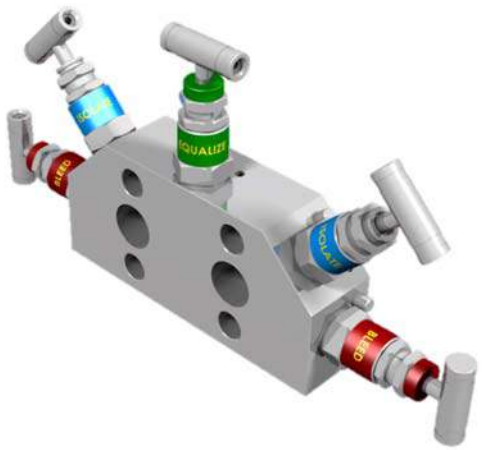

Part No.	Connections	
	INLET	OUTLET
ETV-V5B	2 x ½" NPT Female	2 x Flanged

Notes:
- Custom sizes, ratings and materials are available upon request.
- For NACE conformity of SS316 material, add "-NACE" to the end of part number.
- Flanged according IEC61518/B (type A on request)
- ETV-V5B1 is also available for DP transmitter with horizontal flange.

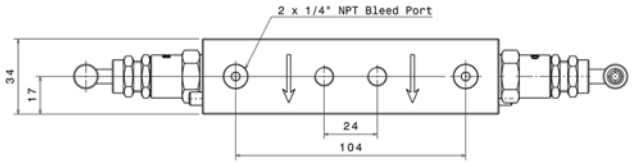

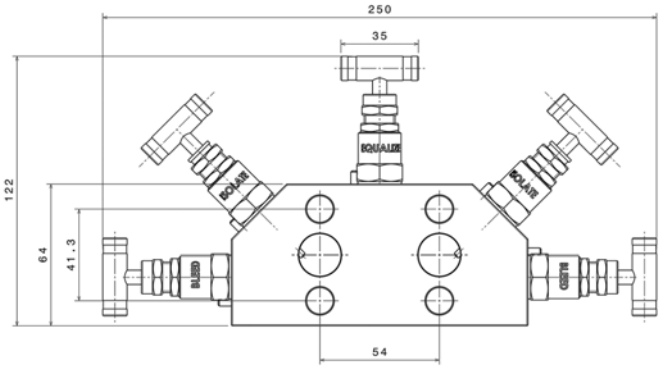

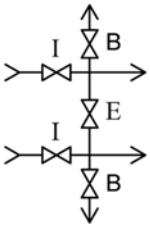

property of Eratech SDN BHD, All right reserved, Website: www.Eratech.com.my

ETV	V1B	3	S	2
Seri				
Needle Valve with bleed port				
Needle Valve	V1			
Needle Valve with bleed port	V1B			
2 Valve Manifold - Standard Type	V2I			
2 Valve Manifold - T Type	V2T			
2 Valve Manifold - H Type	V2H			
2 Valve Manifold - Squareness Type	V2B			
3 Valve Manifold - Standard Type	V3I			
3 Valve Manifold - T Type	V3T			
3 Valve Manifold - H Type	V3H			
3 Valve Manifold - Squareness Type	V3B			
5 Valve Manifold - Standard Type	V5I			
5 Valve Manifold - T Type	V5T			
5 Valve Manifold - H Type	V5H			
5 Valve Manifold - Squareness Type	V5B			
5 Valve Manifold - Squareness Type (for horizontal DPT flange)	V5B1			
Working Pressure				
3000 Psi				
3000 Psi		3		
4000 Psi		4		
6000 Psi		6		
9000 Psi		9		
Material (ASTM A276 / A479)				
SS 316				
SS 304			F	
SS 316			S	
SS 321			B	
Monel 400			M	
Hastelloy C			H	
S31803			D	
Other Material			O	
Instrument / Process connection mode				
Female / male				
Female / Female				1
Female / male				2
Male / Male				3
Male / Female				4
Flange B / NPTF				5
Other				0

property of Eratech SDN BHD, All right reserved, Website: www.Eratech.com.my

	2	2	P	E
Instrument Side				
1/2" NPT				
1/4" NPT	1			
1/2" NPT	2			
3/8" NPT	3			
3/4" NPT	4			
1" NPT	N			
M20x1.5	M			
Flange - Type A	A			
Flange - Type B	B			
Special Screw	S			
Process Side				
1/2" NPT				
1/4" NPT		1		
1/2" NPT		2		
3/8" NPT		3		
3/4" NPT		4		
1" NPT		N		
M20x1.5		M		
Flange - Type A		A		
Flange - Type B		B		
Special Screw		S		
Temperature Range °C				
Low Temperature (-40~230)				
Low Temperature (-40~230) - PTFE Packing			P	
Medium Temperature (230 ~ 350) - Graphite Packing			G	
Mounting Bolt (Material SS304)				
7/16-20 UNF				
7/16-20 UNF				E
M10*1.5				M
None				N

property of Eratech SDN BHD, All right reserved, Website: www.Eratech.com.my

	N	N	Y	H
Oil Free				
No				
No	N			
Yes	Y			
NACE Requirement				
None				
NACE MR0175		5		
NACE MR0175/ISO15156		6		
NACE MR0103		7		
None		N		
Gasket seal				
Yes				
Yes			Y	
No			N	
Test Report	All product are 100% factory tested.			
Hydrostatic Pressure Test (B & S)				
Hydrostatic Pressure Test (B & S)				H
Pneumatic Test				P
None				N
Both Hydrostatic & Pneumatic Test				B

property of Eratech SDN BHD, All right reserved, Website: www.Eratech.com.my